[illegible]

[illegible] — [illegible] — [illegible]

[illegible] TAKEGAWA [illegible]

[illegible]

○ [illegible]

☆ [illegible] ☆

◎ [illegible]
◎ [illegible]
◎ [illegible]
◎ [illegible]
◎ [illegible]
◎ [illegible]
◎ [illegible]

⚠ [illegible]

⚠ [illegible]

◎ [illegible]
◎ [illegible]
◎ [illegible]

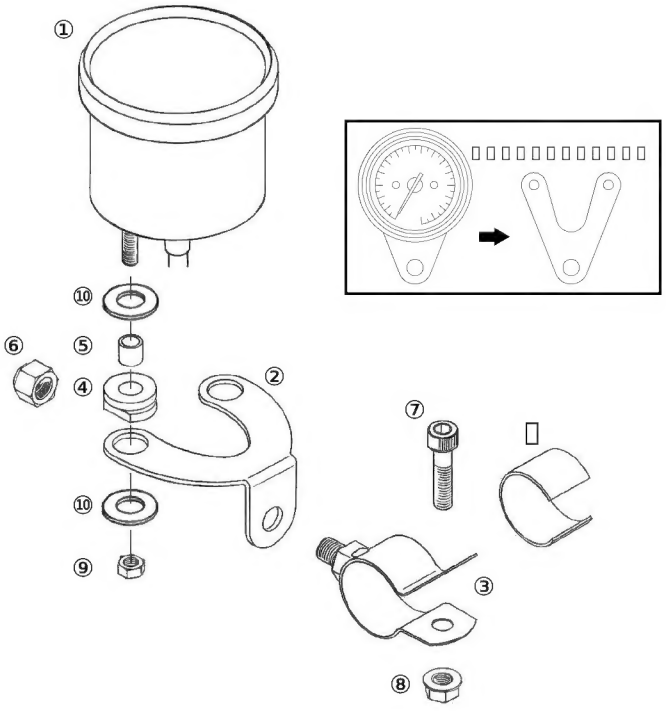


| | | |
|---|---|---|
| | | |
| | | |
| | | |
| | | |
| | | |
| | | |
| | × | |
| | | |
| | | |
| | | |
| | | |
| | | |

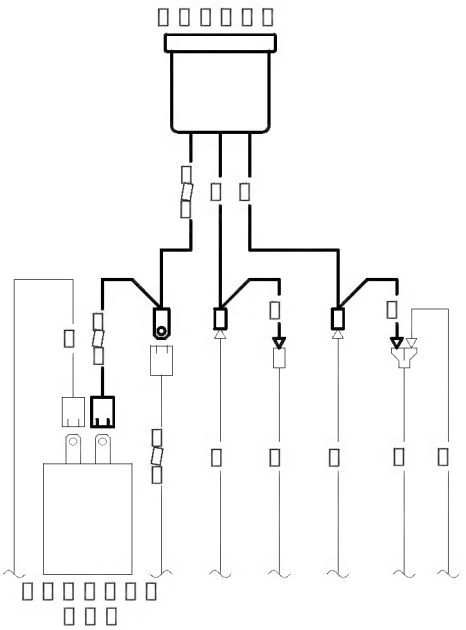


SPECIAL PARTS TAKEGAWA
TEL
FAX
URL http://www.takegawa.co.jp

# ☆

○
○
○
○

◎

o

⚠

o

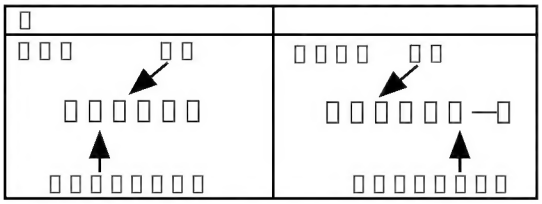

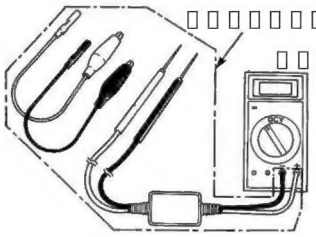

◎

o

①

②

③

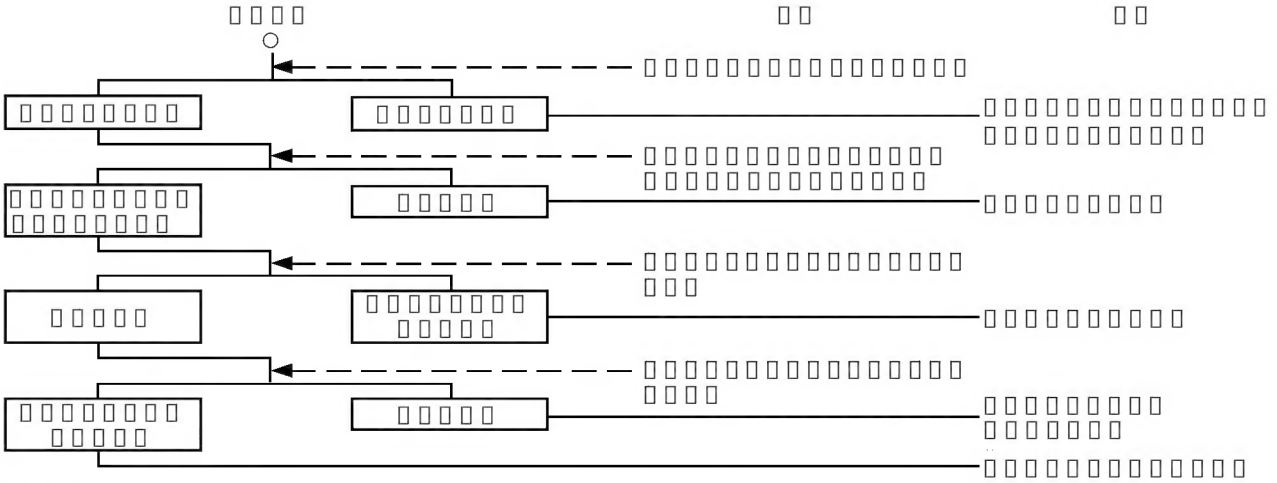
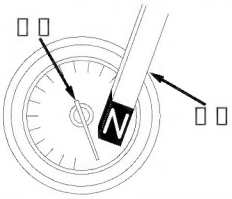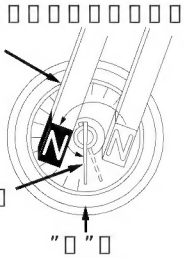
◎